NORAH
D E S I G N

Vasca freestanding | *Bathtub freestanding*
code: ARBT02
Designer: Norah Creative Lab FM

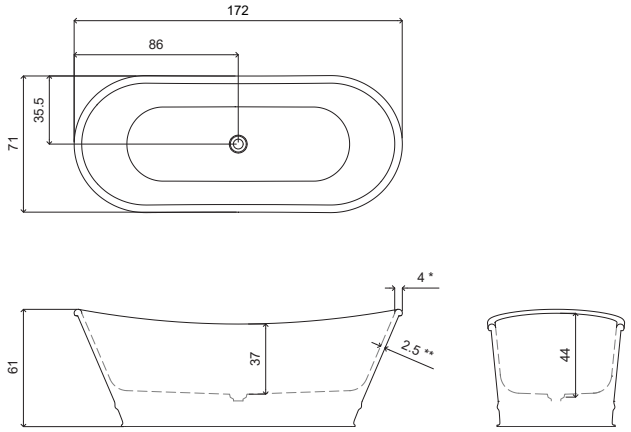

Capacità: c.a 280 l
Capacity: c.a 280 l

Materiali: NorahCryl | NorahMarble
Materials: NorahCryl | NorahMarble

Finiture NorahCryl
Finish NorahCryl

Bianco, Nero, Avorio, Seta, C.Grey, Oliva, Sabbia

Ruggine, Senape, Cactus, Cipria, Anice, Terracotta, Oceano

Finiture NorahMarble
Finish NorahMarble

Bardiglio Imperiale, Acqua Bianca, Calacatta Oro

Misure
Size

Dimensioni cm *Dimension cm*	172x71x61
Peso netto Kg *Net weight Kg*	130,0
Dimensioni imballo cm *Packaging dimension cm*	185x81x80
Peso lordo Kg *Gross weight Kg*	150,0

Descrizione

Vasca da bagno freestanding in NorahCryl, disponibile in tutti i colori del nostro campionario.
Disponibile in NorahMarble nelle nostre tre varianti.
Completo di piletta click clack e sifone con tappo in finitura con logo NorahDesign.

Description

Freestanding bathtub in NorahCryl, available in all colors from our sample collection. Also available in NorahMarble in our three finish options. Supplied with click-clack waste and siphon with matching-finish cap featuring the NorahDesign logo.

Note

I prodotti realizzati nella versione Marmo non comprendono la cover con logo ma solo cover in finitura.
Indicazioni prodotto per versione in Marmo
Peso netto Kg: 800
Dimensioni imballo cm: 190x90x82 con pallet
Peso lordo Kg: 880
Fondo pieno
* Bordo superiore 6 cm
** Spessore pareti 4 cm

Notes

Products made in the Marble version do not include the logo cover, but only the finished cover.
Product specifications – Marble version
Net weight: 800 kg
Packaging dimensions: 190 x 90 x 82 cm (with pallet)
Gross weight: 880 kg
Solid base
Top edge: 6 cm
Wall thickness: 4 cm

NORAH
DESIGN

Dettaglio prodotto
Product Details

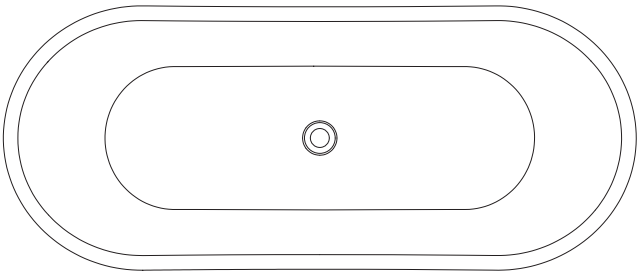

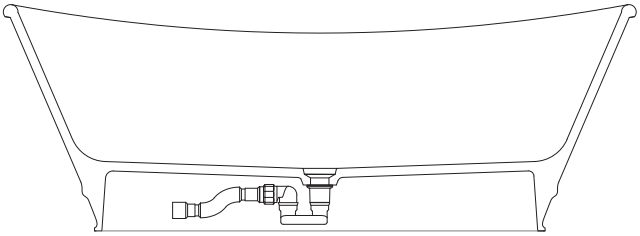

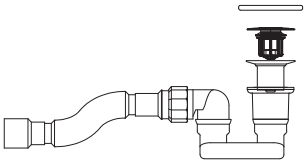

Sifone e cover
Siphon and cover